Electrolux PROFESSIONAL

Modular Cooking Range Line thermaline 80 - 4 Zone Freestanding Electric Solid Top, 1 Side, H=800

ITEM #

MODEL #

NAME #

SIS #

AIA #



588356 (MALCFAHDAO) Electric Solid Top, 4 zones, one-side operated

Short Form Specification

Item No.

Unit constructed according to DIN 18860_2 with 20 mm drop nose top and 70 mm recessed plinth. Internal frame for heavy duty sturdiness in stainless steel. 2 mm top in 1.4301 (AISI 304). Flat surface construction, easily cleanable. THERMODUL connection system enables seamless worktop when units are connected and avoids soil penetrating. Solid top made of smooth, pore-free, steel. 4 independently controlled heating zones with 2 electronic sensors per zone for temperature surface control and 8 power levels. Rapid plate heat up, continuously ready to use. Overheat protection switches off the supply in case of overheating. Standby function saves energy and quickly recovers maximum power. Metal knobs with embedded hygienic silicon "soft" grip enable easier handling and cleaning.
IPX5 water resistance certification.
Configuration: Freestanding, one-side operated.

Main Features

- 4 heating zones independently controlled.
- Rapid heat up of the plate and continuously ready for use.
- Overheat protection: a temperature sensor switches off the supply in case of overheating.
- Pans can easily be moved from one area to another without lifting.
- Solid top cooking surface made of 20 mm thick steel, DIN 1.7335, smooth pore-free and easy to clean.
- Wide rounded cleaning zone around the plates for easier cleaning.
- All major components may be easily accessed from the front.
- THERMODUL connection system creates a seamless work top when units are connected to each other thus avoiding soil penetrating vital components and facilitating the removal of units in case of replacement or service.
- Metal-covered knobs with embedded hygienic "soft-touch" grip for easier handling and cleaning. The special design of the controls prevents infiltration of liquids or soil into vital components.
- Large visible digital display manufactured in tempered glass to resist heat and chemicals, showing temperatures or power settings. The display also shows on/off status of the appliance and on/off status of the heating elements.
- Cooking plate and base joint profile guarantee against soil infiltration.
- Two electronic sensors per zone to control surface temperature and to protect cooking plate from overheating.
- 8 power levels.

Construction

- 2 mm top in 1.4301 (AISI 304).
- Unit constructed according to DIN 18860_2 with 20 mm drop nose top and 70 mm recessed plinth.
- Flat surface construction with minimal hidden areas to easily clean all surfaces
- Unit constructed according to DIN 18860_2 with 20 mm drop nose top.
- IPX5 water resistance certification.
- Internal frame for heavy duty sturdiness in stainless steel.

Sustainability

- Standby function for energy saving and fast recovery of maximum power.

APPROVAL:

Optional Accessories

- Connecting rail kit, 800mm — PNC 912500 ❑
- Stainless steel side panel, 800x800mm, freestanding — PNC 912508 ❑
- Portioning shelf, 800mm width — PNC 912526 ❑
- Portioning shelf, 800mm width — PNC 912556 ❑
- Folding shelf, 300x800mm — PNC 912577 ❑
- Folding shelf, 400x800mm — PNC 912578 ❑
- Fixed side shelf, 200x800mm — PNC 912583 ❑
- Fixed side shelf, 300x800mm — PNC 912584 ❑
- Fixed side shelf, 400x800mm — PNC 912585 ❑
- Stainless steel front kicking strip, 800mm width — PNC 912598 ❑
- Stainless steel side kicking strips left and right, freestanding, 800mm width — PNC 912619 ❑
- Stainless steel side kicking strips left and right, back-to-back, 1610mm width — PNC 912625 ❑
- Stainless steel plinth, freestanding, 800mm width — PNC 912825 ❑
- Connecting rail kit: modular 80 (on the left) to ProThermetic tilting (on the right), ProThermetic stationary (on the left) to ProThermetic (on the right) — PNC 912971 ❑
- Connecting rail kit: modular 80 (on the right) to ProThermetic tilting (on the left), ProThermetic stationary (on the right) to ProThermetic (on the left) — PNC 912972 ❑
- Endrail kit, flush-fitting, left — PNC 913109 ❑
- Endrail kit, flush-fitting, right — PNC 913110 ❑
- Endrail kit (12.5mm) for thermaline 80 units, left — PNC 913200 ❑
- Endrail kit (12.5mm) for thermaline 80 units, right — PNC 913201 ❑
- Stainless steel side panel, left, h=800 — PNC 913216 ❑
- Stainless steel side panel, right, h=800 — PNC 913217 ❑
- T-connection rail for back-to-back installations without backsplash (to be ordered as S-code) — PNC 913227 ❑
- Insert profile D=800mm — PNC 913230 ❑
- Perforated shelf for warming cabinets and cupboard bases (one-side operated TL80-85-90 and two-side operated for TL80) — PNC 913234 ❑
- Energy optimizer kit 32A - factory fitted — PNC 913247 ❑
- Endrail kit, (12.5mm), for back-to-back installation, left — PNC 913249 ❑
- Endrail kit, (12.5mm), for back-to-back installation, right — PNC 913250 ❑
- Endrail kit, flush-fitting, for back-to-back installation, left — PNC 913253 ❑
- Endrail kit, flush-fitting, for back-to-back installation, right — PNC 913254 ❑
- Side reinforced panel only in combination with side shelf, for freestanding units — PNC 913257 ❑
- Side reinforced panel only in combination with side shelf, for back-to-back installations, left — PNC 913273 ❑
- Side reinforced panel only in combination with side shelf, for back-to-back installation, right — PNC 913274 ❑
- Shelf fixation for TL80-85-90 one-side operated, TL80 two-side operated — PNC 913281 ❑
- Filter W=800mm — PNC 913665 ❑
- Stainless steel dividing panel, 800x800mm, (it should only be used between Electrolux Professional thermaline Modular 80 and thermaline C80) — PNC 913669 ❑
- Electric mainswitch 63A 10mm2 NM for modular H800 electric units (factory fitted) — PNC 913677 ❑
- Stainless steel side panel, 800x800mm, flush-fitting (it should only be used against the wall, against a niche and in between Electrolux Professional thermaline and ProThermetic appliances and external appliances - provided that these have at least the same dimensions) — PNC 913685 ❑

The company reserves the right to make modifications to the products without prior notice. All information correct at time of printing.

Modular Cooking Range Line thermaline 80 - 4 Zone Freestanding Electric Solid Top, 1 Side, H=800

Front

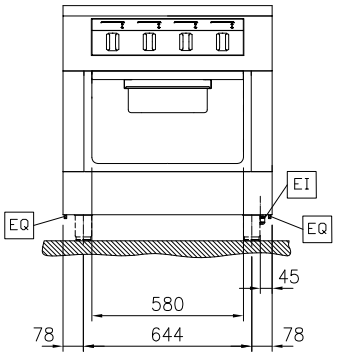

Side

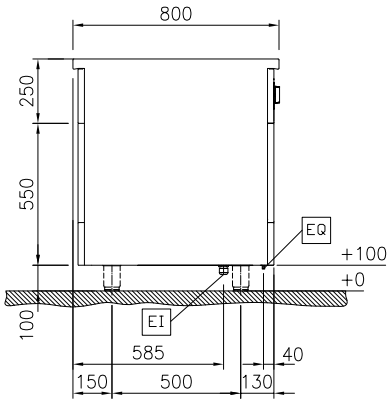

EI = Electrical inlet (power)
EQ = Equipotential screw

Top

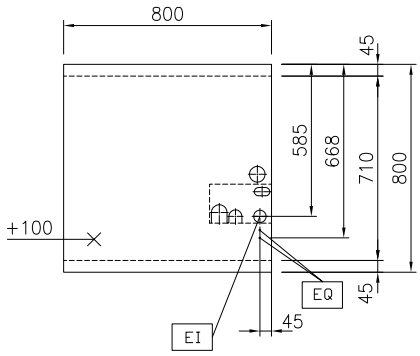

Electric

Supply voltage:	400 V/3N ph/50/60 Hz
Electrical power max.:	12 kW

Key Information:

Working Temperature MIN:	100 °C
Working Temperature MAX:	450 °C
External dimensions, Width:	800 mm
External dimensions, Depth:	800 mm
External dimensions, Height:	800 mm
Storage Cavity Dimensions (width):	580 mm
Storage Cavity Dimensions (height):	330 mm
Storage Cavity Dimensions (depth):	740 mm
Net weight:	145 kg
Configuration:	On Base;One-Side Operated
Front Plates Power:	3 - 3 kW
Back Plates Power:	3 - 3 kW
Solid top usable surface (width):	670 mm
Solid top usable surface (depth):	650 mm

Sustainability

Current consumption:	26 Amps

The company reserves the right to make modifications to the products without prior notice. All information correct at time of printing.

2026.11.19